APPLICATIONS

NEW CONSTRUCTION, COMMERCIAL, OR RESIDENTIAL:

- **8600**
- **8661**

COMMERCIAL OR RESIDENTIAL:

- **8666**
- **8667**

LIGHT SOURCES

LED/INCANDESCENT COMPATIBILITY:

- LED
  - **8660 or 8667:** 90 Watts Max
  - **8661 or 8666:** 150 Watts Max
- Incandescent
  - **8660 or 8667:** 90 Watts Max
  - **8661 or 8666:** 150 Watts Max
- Lamps Sold Separately (Refer to Compatible Trims for Compatible Lamp Types and Sizes)

EDISON BASE LAMPHOLDER: Medium Base (E26)

THERMAL MANAGEMENT: Passive

ADJUSTABLE SOCKET CUP: Socket cup adjusts vertically.

COMPATIBLE TRIMS

FINISH/COLORS/TRIM:

- See Compatible Trims Page 132, Page 133, Page 134, Page 135, Page 136, and Page 137

INSTALLATION

CEILING:

- Accommodates Up to 1" Thickness
- 6⅛" Ceiling Cutout Size
- **8661 or 8666**
  - Non-Type IC: Insulation to Be Kept 3" Away
  - Non Air-Tight
- **8660 or 8667**
  - Type IC: Suitable for Direct Contact with Insulation
  - Air-Tight

MOUNTING:

- **8660 or 8661**
  - Adjustable Hanger Bars (14" to 24")
  - 7½" Height Allows Use in 2" x 8" Joist Construction
- **8666 or 8667**
  - Spring Clips Allow for Fast and Easy Installation
  - 7½" Height Allows Use in 2" x 8" Joist Construction

J-BOX WIRING:

- **8660 or 8661**
  - Integral Thru-Branch, 4 In/4 Out
- **8666 or 8667**
  - Integral Thru-Branch, 2 In/2 Out

COMPLIANCES/WARRANTY

cULus LISTED
SUITABLE FOR DAMP LOCATIONS
LED COMPATIBLE RECESSED DOWNLIGHT

6" DIAMETER INCANDESCENT/LED RECESSED DOWNLIGHT

8660/8661

RECESSED DOWNLIGHT MODEL

- ☐ **8660** (IC) (90W)
- ☐ **8661** (NC) (150W)

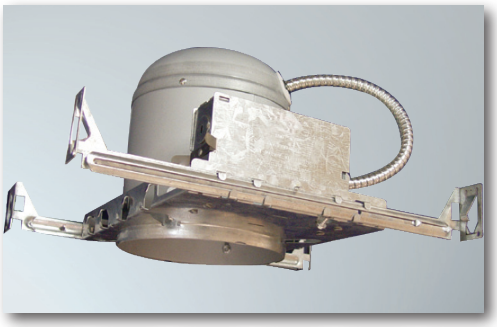

QUICK VIEW

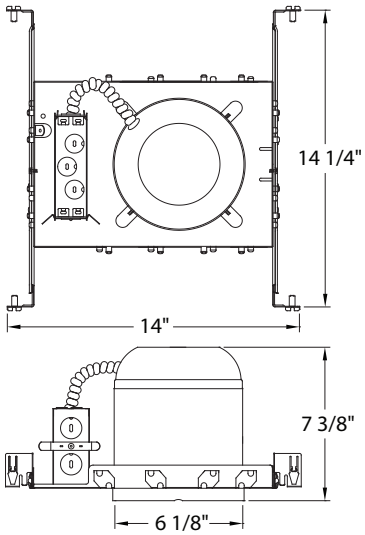

6" DIAMETER INCANDESCENT/LED RECESSED REMODEL

8666/8667

REMODEL DOWNLIGHT MODEL

- ☐ **8666** (NC) (150W)
- ☐ **8667** (IC) (90W)

QUICK VIEW

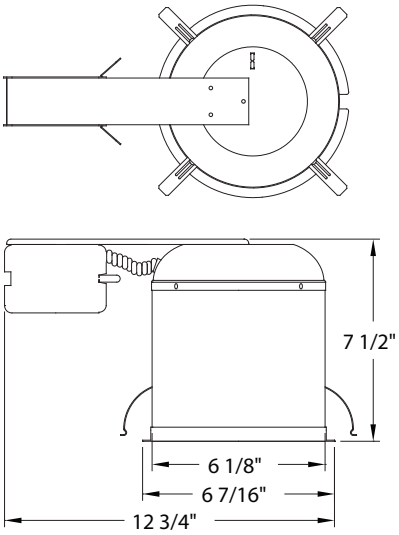

QuantaLight™

DESIGN COPYRIGHT ©

APPLICATIONS

NEW CONSTRUCTION, COMMERCIAL, OR RESIDENTIAL:
- **8670**

COMMERCIAL OR RESIDENTIAL:
- **8671**

LIGHT SOURCES

LED/INCANDESCENT COMPATIBILITY:
- LED (75 Watts Max)
- Incandescent (75 Watts Max)
- Lamps Sold Separately (Refer to Compatible Trims for Compatible Lamp Types and Sizes)

EDISON BASE LAMPHOLDER: Medium Base (E26)

THERMAL MANAGEMENT: Passive

COMPATIBLE TRIMS

FINISH/COLORS/TRIM:
- See Compatible Trims Page 132, Page 133, Page 134, Page 135, Page 136, and Page 137

INSTALLATION

CEILING:
- Type IC
  - Suitable for Direct Contact with Insulation
- 6⅛" Ceiling Cutout Size

MOUNTING:
- **8670**
  - Adjustable Hanger Bars (14" to 24")
  - 5½" Height Allows Use in 2" x 6" Joist Construction
- **8671**
  - Spring Clips Allow for Fast and Easy Installation
  - 5½" Height Allows Use in 2" x 6" Joist Construction

J-BOX WIRING:
- **8670**
  - Integral Thru-Branch, 4 In/4 Out
- **8671**
  - Integral Thru-Branch, 2 In/2 Out

COMPLIANCES/WARRANTY

cULus LISTED SUITABLE FOR DAMP LOCATIONS

LED COMPATIBLE RECESSED DOWNLIGHT

6" DIA. INCANDESCENT/LED SHALLOW HOUSING RECESSED DOWNLIGHT

RECESSED DOWNLIGHT MODEL ☑**8670**

8670

QUICK VIEW

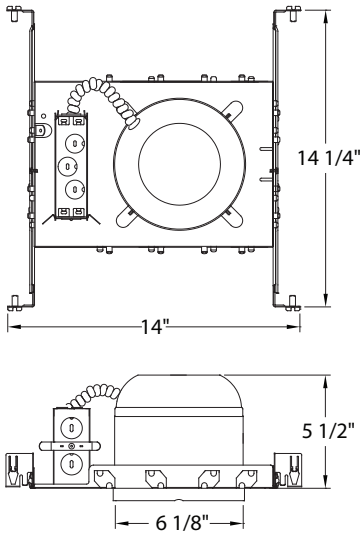

6" DIA. INCANDESCENT/LED SHALLOW HOUSING RECESSED REMODEL

REMODEL DOWNLIGHT MODEL ☑**8671**

8671

QUICK VIEW

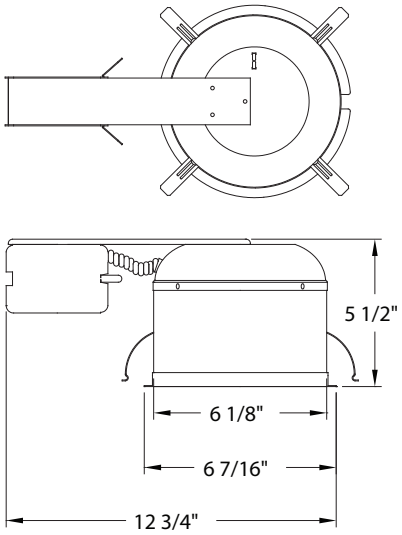

6" Reflectors/Trims Compatible with 8660, 8661, 8666, & 8667
See more trim options on pages 133, 134, 135, 136, & 137.

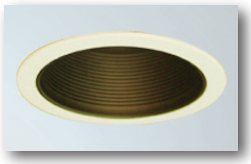

8006-5 *Black*
Metal Baffle
Non-IC
150W PAR38/R40
IC
90W PAR30/R30

8006-6 *White*
Metal Baffle
Non-IC
150W PAR38/R40
IC
90W PAR30/R30

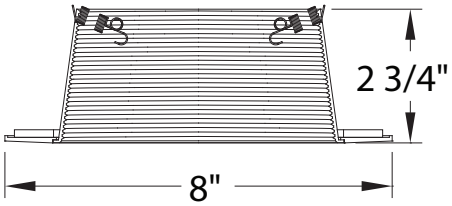

8006

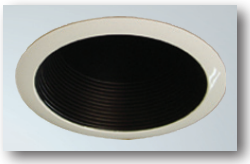

8007-5 *Black*
Air Tight
Cone Baffle
Non-IC/IC
75W PAR38/R40

8007-6 *White*
Air Tight
Cone Baffle
Non-IC/IC
75W PAR38/R40

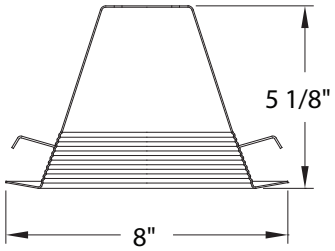

8007

8609-6
Fresnel Shower
Non-IC
60W A19
IC
40W A19
Wet location

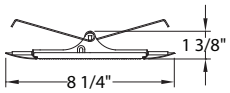

8609

8014-6
Eyeball
Non-IC
75W PAR30/R30

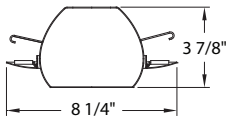

8014

8015-6
Albalite Shower
Non-IC
60W A19
IC
40W A19
Wet location

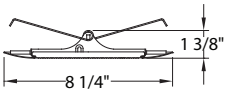

8015

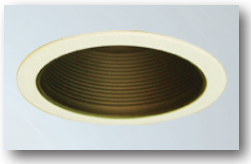

8016-5 *Black*
Metal Baffle
Non-IC/IC
75W PAR30/R30

8016-6 *White*
Metal Baffle
Non-IC/IC
75W PAR30/R30

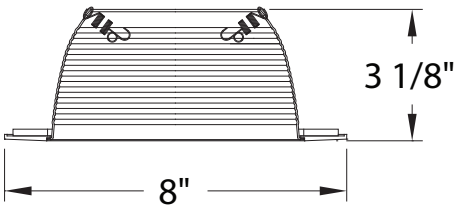

8016

8025-6
Open Trim
Non-IC/IC
75W PAR30/R30

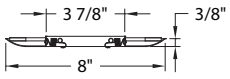

8025

8035-6
Open Trim
Non-IC
150W PAR38/R40

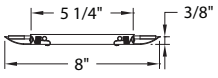

8035

8613-3
Aluminum Cone
Reflector
Non-IC
100W A19
IC
60W A19

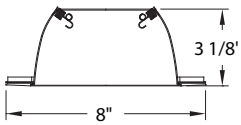

8613

8614-6
Drop Opal Lens
Shower
Non-IC
60W A19
IC
40W A19
Wet location

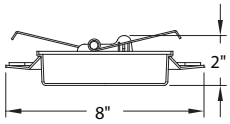

8614

QuantaLight™

DESIGN COPYRIGHT ©